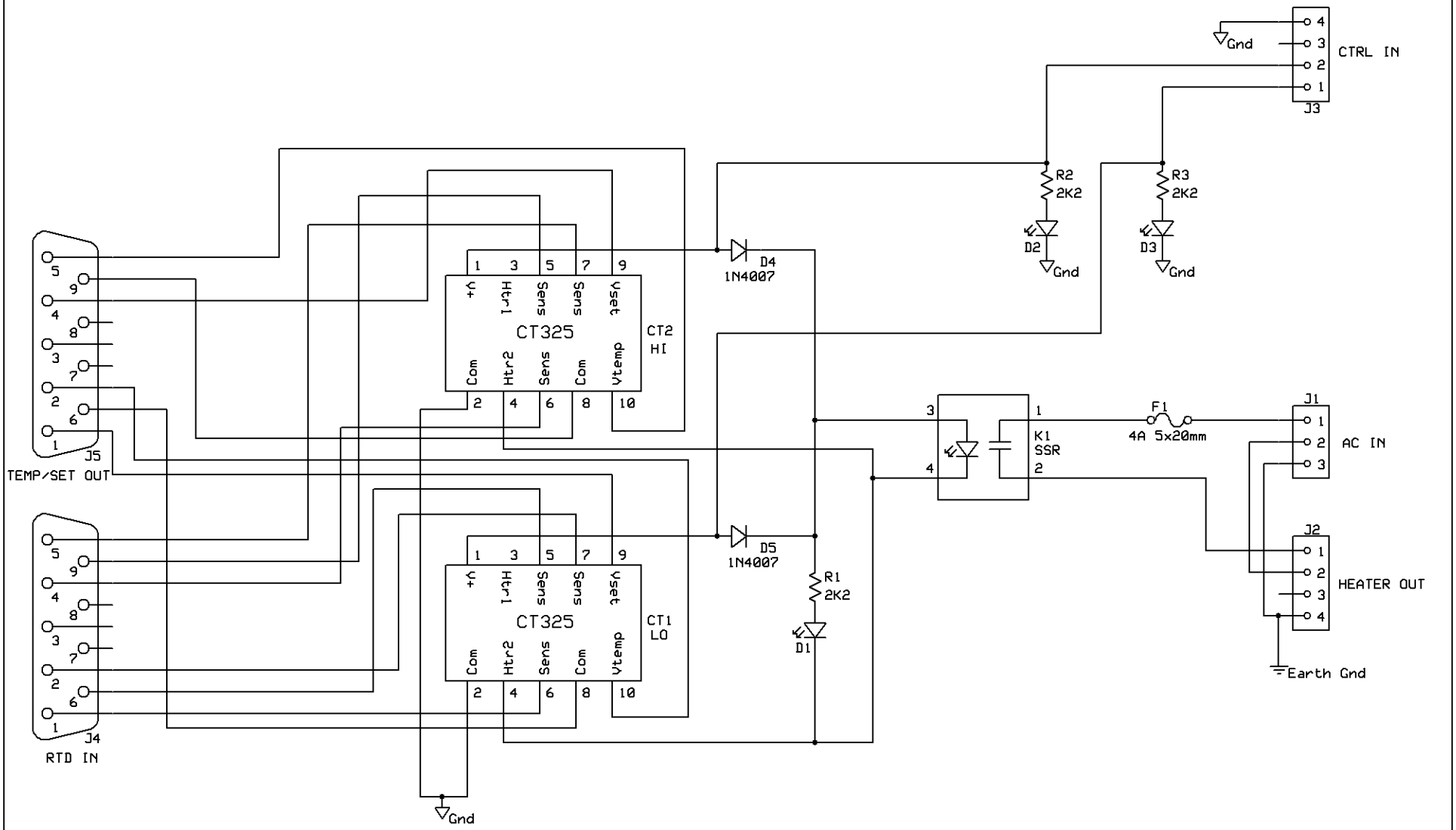

NE-CAT

Dual-Setpoint Heater Controller

Jim Withrow	Rev 1.0 6/20/2012	Page 1 of 1